Code : **95-2 40-- A**
Bellows Suction Cup 4.5 folds
Series 95-2, Ø 41 mm

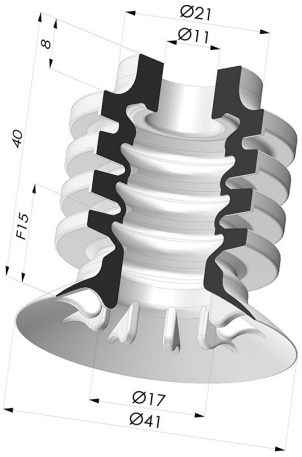

TECHNICAL INFORMATION

Range :	Suction cup
Category :	With bellows
Series :	95-2
Height (in mm) :	40
Shape :	4.5 Bellows
Contact lip diameter :	41 mm
inner barrel diameter :	11mm
Number of bellows :	4.5 Bellows
Horizontal force :	60 N
Vertical force :	30 N
Arrow :	15 mm

Variants:



Variant reference:
95-2 40SL A
- Color: Red food-grade CE certification
- Matter: Silicone
- Shore Hardness: SH40



Variant reference:
95-2 40SLDB A
- Color: Blue food-grade CE certification
- Matter: Detectable silicone
- Shore Hardness: SH40

Material guide:

	Material	Code	Temperature resistance (°C)	Flexibility	Abrasion resistance	UV/Weather resistance	Oil resistance	Food compatibility	Migration test
	Silicone Red food-grade CE certification (Shore SH40)	SL	-60/+250	✓✓✓	⊗	✓✓✓	⊗	FDA **	A, B, D2
	Detectable silicone Blue food-grade CE certification (Shore SH40)	SLDB	-60/+250	✓✓✓	⊗	✓✓✓	⊗	FDA **	A, B, D2

Requests for FDA and/or EC certificates must be made AT THE TIME OF ORDER. Any later request will incur additional charges. To meet the expectations of our industrial customers, NOVACOM offers the widest range of elastomer and thermoplastic materials. We can also develop new materials based on precise specifications, in order to solve specific applications for our customers.

✓✓✓ Excellent | ✓✓ Good | ✓ Low | ⊗ Poor | ⊗⊗ Not recommended
*FDA and/or EC certificate may be requested for various references at the time of order; please contact us.
** Food contact certification: (EC) 1935/2004 - (FDA) 21 CFR 177.2600
*** Food contact certification: (EC) 10/2011 - (FDA) 21 CFR

Related products:

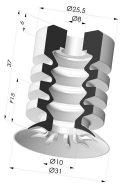

Bellows Suction Cup 4.5 folds Series 95-2, Ø 31 mm
Product reference: 95-2 30-- A

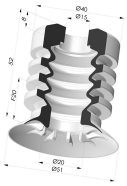

Bellows Suction Cup 4.5 folds Series 95-2, Ø 51 mm
Product reference: 95-2 50-- A

E-mail: info@novacom-grp.com
Z.A. de Sars et Rosières - 30, rue de l'épau - 59230 ROSULT - France
Phone. : +33 (0)3 27 30 53 53
VAT Number : FR57 381 120 484