Code : **96B 30-- A**
Bellows Suction Cup 2.5 folds
Series 96B, Ø 30 mm

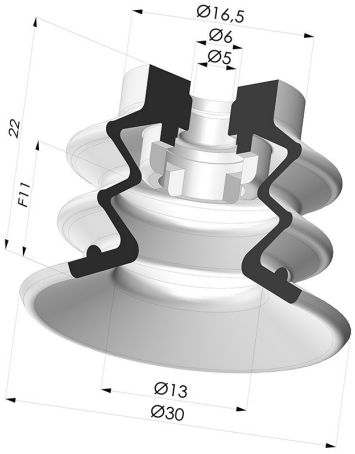

TECHNICAL INFORMATION

Range :	Suction cup
Category :	With bellows
Series :	96B
Height (in mm) :	22
Shape :	2.5 Bellows
Contact lip diameter :	30 mm
inner barrel diameter :	5mm
Number of bellows :	2.5 Bellows
Horizontal force :	28 N
Vertical force :	14 N
Arrow :	11 mm

Variants:



Variant reference:
96B 30PU A
- Color: Green
- Matter: Polyurethane
- Shore Hardness: SH60

Related products:



Separable Female Fitting M5
Product reference: 9PM5-2



Separable Female Fitting M5 - with Filter
Product reference: 9PM5-2-F



Separable Female Fitting M5 - with Spray Nozzle
Product reference: 9PM5-2-GIC

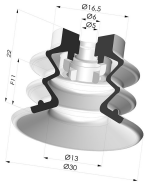

Bellows Suction Cup 2.5 folds Series 96C, Ø 30 mm
Product reference: 96C 30-- A



Flexible White Filter Series FIBS Ø 22 mm
Product reference: FIBS 96 30



Separable Male Fitting 1/8G - with Filter
Product reference: 9PM18-4-F



Separable Female Fitting 1/8G - with Filter
Product reference: 9PF18-4-F

E-mail: info@novacom-grp.com
Z.A. de Sars et Rosières - 30, rue de l'épau - 59230 ROSULT - France
Phone. : +33 (0)3 27 30 53 53
VAT Number : FR57 381 120 484