Code : **96B 40-- A**
Bellows Suction Cup 2.5 folds
Series 96B, Ø 40 mm

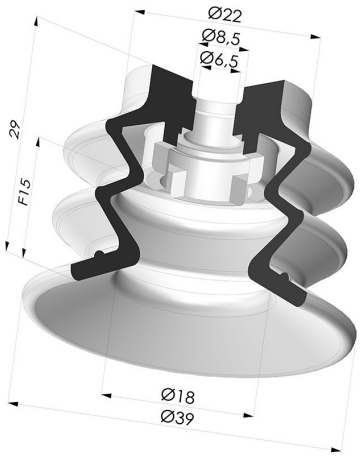

TECHNICAL INFORMATION

Range :	Suction cup
Category :	With bellows
Series :	96B
Height (in mm) :	29
Shape :	2.5 Bellows
Contact lip diameter :	40 mm
inner barrel diameter :	6.5mm
Number of bellows :	2.5 Bellows
Horizontal force :	39 N
Vertical force :	24.5 N
Arrow :	15 mm

Variants:



Variant reference:
96B 40PU A
- Color: Green
- Matter: Polyurethane
- Shore Hardness: SH60

Related products:



Separable Male Fitting 1/4G

Product reference: 9M14-2



Separable Male Fitting 1/4G - with Spray Nozzle

Product reference: 9M14-2-GIC



Separable Female Fitting 1/8G

Product reference: 9M18-2



Separable Female Fitting 1/8G - with Filter

Product reference: 9M18-2-F



Separable Female Fitting 1/8G - with Spray Nozzle

Product reference: 9M18-2-GIC



Separable Female Fitting 1/8G - with 5 Outputs

Product reference: 9M18-3



Separable Male Fitting 3/8G

Product reference: 9M38-2



Separable Male Fitting 3/8G - with Filter

Product reference: 9M38-2-F



Separable Male Fitting 3/8G - with Spray Nozzle

Product reference: 9M38-2-GIC

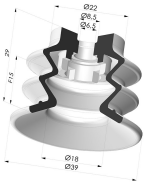

Bellows Suction Cup 2.5 folds Series 96C, Ø 40 mm

Product reference: 96C 40-- A



Flexible White Filter Series FIBS Ø 29 mm

Product reference: FIBS 96 40



Separable Male Fitting 1/4G - with Filter

Product reference: 9MM14-4-F



Separable Female Fitting 1/4G - with Filter

Product reference: 9MF14-4-F

E-mail: info@novacom-grp.com
Z.A. de Sars et Rosières - 30, rue de l'épau - 59230 ROSULT - France
Phone. : +33 (0)3 27 30 53 53
VAT Number : FR57 381 120 484