Code : **4PA160 90 69--A**

Ventouse Oblongue Série 4PA 156x85.5MM

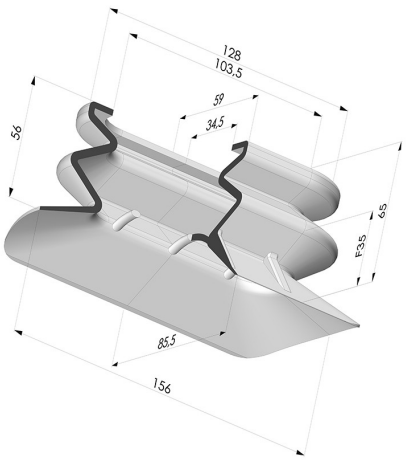

TECHNICAL INFORMATION

Range :	Suction cup
Category :	Oblong
Series :	4PA
Height (in mm) :	65
Shape :	Oblong
Length :	156 mm
Width :	85.5 mm
inner barrel diameter :	103.5x34.5 mm
Number of bellows :	1.5 Bellows
Horizontal force :	575 N
Vertical force :	287 N
Volume :	233 cm³
Mass :	114 g
Arrow :	35 mm

Variants:



Variant reference:
4PA160 90 69SLT A
- Color: Translucent
- CE food certified
- Matter: Silicone
- Shore Hardness: SH40



Variant reference:
4PA160 90 69SLB A
- Color: White
- FDA and CE food-grade certified
- Matter: Silicone
- Shore Hardness: SH40

Material guide:

	Material	Code	Temperature resistance (°C)	Flexibility	Abrasion resistance	UV/Weather resistance	Oil resistance	Food compatibility	Migration test
	Silicone Translucent (Shore SH40)	SL T	-60/+250	✓✓✓	✓	✓✓✓	✓	FDA **	✗
	Silicone White (Shore SH40)	SL B	-60/+250	✓✓✓	✗	✓✓✓	✗	FDA **	✗

Requests for FDA and/or EC certificates must be made AT THE TIME OF ORDER. Any later request will incur additional charges. To meet the expectations of our industrial customers, NOVACOM offers the widest range of elastomer and thermoplastic materials. We can also develop new materials based on precise specifications, in order to solve specific applications for our customers.

✓✓✓ Excellent | ✓✓ Good | ✓ Low | ✗ Poor | ✗✗ Not recommended

*FDA and/or EC certificate may be requested for various references at the time of order; please contact us.

** Food contact certification: (EC) 1935/2004 - (FDA) 21 CFR 177.2600

*** Food contact certification: (EC) 10/2011 - (FDA) 21 CFR

E-mail: info@novacom-grp.com
Z.A. de Sars et Rosières - 30, rue de l'épau - 59230 ROSULT - France
Phone. : +33 (0)3 27 30 53 53
VAT Number : FR57 381 120 484