Code : **40D 25-- A**
Oblong Suction Cup Series 4, 22,8x14.6mm

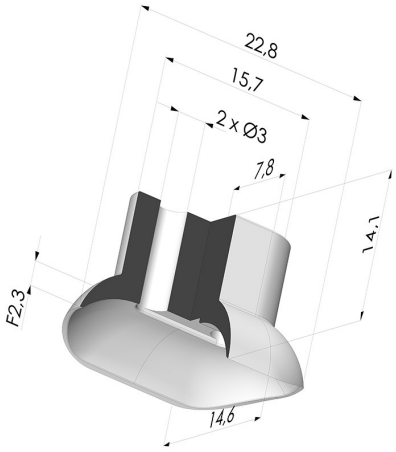

TECHNICAL INFORMATION

Range :	Suction cup
Category :	Oblong
Series :	4
Height (in mm) :	14.1
Shape :	Oblong
Length :	22.8 mm
Width :	14.6 mm
inner barrel diameter :	2x3 mm
Number of bellows :	0.5 Bellows
Horizontal force :	13 N
Vertical force :	6.5 N
Volume :	0.89 cm³
Mass :	1.20 g
Arrow :	2.3 mm

Variants:



Variant reference:
40D 25NI A
- Color: Black
- Matter: Nitrile

Related products:

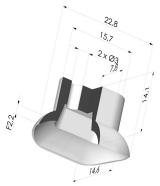

Oblong Suction Cup Series 4, 22,8x14.6mm
Product reference: 40D-2 25-- A

E-mail: info@novacom-grp.com
Z.A. de Sars et Rosières - 30, rue de l'épau - 59230 ROSULT - France
Phone. : +33 (0)3 27 30 53 53
VAT Number : FR57 381 120 484