Code : **40B 55NI A**
Oblong Suction Cup Series 4, 54x18 mm

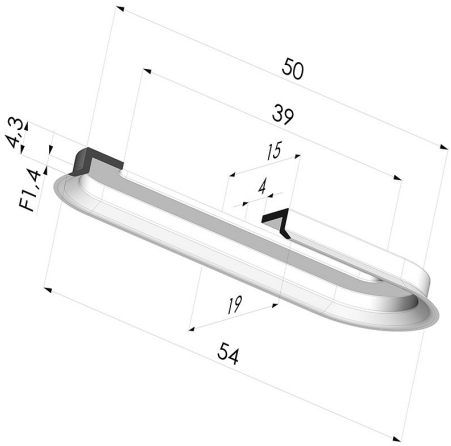

TECHNICAL INFORMATION

Range :	Suction cup
Category :	Oblong
Series :	4
Height (in mm) :	4.3
Shape :	Oblong
Length :	50 mm
Width :	19 mm
inner barrel diameter :	39x5 mm
Number of bellows :	0.5 Bellows
Horizontal force :	40 N
Vertical force :	20 N
Volume :	2.26 cm³
Mass :	0.96 g
Arrow :	1.4 mm

Variants:



Variant reference:
40B 55NI A
- Color: Black
- Matter: Nitrile
- Shore Hardness: SH50

Material guide:

	Material	Code	Temperature resistance (°C)	Flexibility	Abrasion resistance	UV/Weather resistance	Oil resistance	Food compatibility	Migration test
	Nitrile Black (Shore SH50)	NI	-10/+80	✓	✓	✗	✓✓	✗	✗

Requests for FDA and/or EC certificates must be made AT THE TIME OF ORDER. Any later request will incur additional charges. To meet the expectations of our industrial customers, NOVACOM offers the widest range of elastomer and thermoplastic materials. We can also develop new materials based on precise specifications, in order to solve specific applications for our customers.

✓✓✓ Excellent | ✓✓ Good | ✓ Low | ✗ Poor | ✗✗ Not recommended
*FDA and/or EC certificate may be requested for various references at the time of order; please contact us.
** Food contact certification: (EC) 1935/2004 - (FDA) 21 CFR 177.2600
*** Food contact certification: (EC) 10/2011 - (FDA) 21 CFR

E-mail: info@novacom-grp.com
Z.A. de Sars et Rosières - 30, rue de l'épau - 59230 ROSULT - France
Phone. : +33 (0)3 27 30 53 53
VAT Number : FR57 381 120 484