Code : **71 29-- A**
Flat Suction Cup Series 7, Ø 29 mm

TECHNICAL INFORMATION

Range :	Suction cup
Category :	Plates
Series :	7
Height (in mm) :	11
Shape :	Plate
Contact lip diameter :	29 mm
Top diameter :	5 mm
inner barrel diameter :	4.5 mm
Number of bellows :	0.5 Bellows
Horizontal force :	28 N
Vertical force :	14 N
Arrow :	2.5 mm

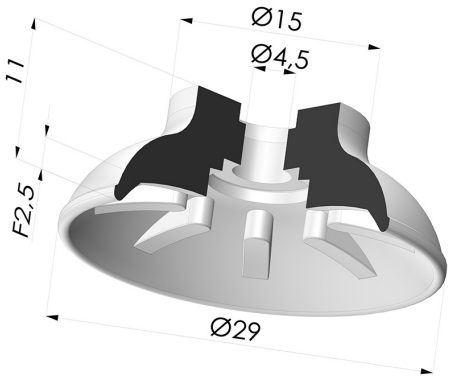

Variants:



Variant reference:
71 29CN A
- Color: Brown FDA food certified
- Matter: Natural rubber
- Shore Hardness: SH40



Variant reference:
71 29VI A
- Color: Blue
- Matter: Vinyl
- Shore Hardness: SH50

Material guide:

	Material	Code	Temperature resistance (°C)	Flexibility	Abrasion resistance	UV/Weather resistance	Oil resistance	Food compatibility	Migration test
	Natural rubber Brown FDA food certified (Shore SH40)	CN	-20/+70	✓✓✓	✓✓	✗✗	✗✗	FDA **	✗
	Vinyl Blue (Shore SH50)	VI	-30/+65	✓✓	✓✓	✓	✓	✗	✗

Requests for FDA and/or EC certificates must be made AT THE TIME OF ORDER. Any later request will incur additional charges. To meet the expectations of our industrial customers, NOVACOM offers the widest range of elastomer and thermoplastic materials. We can also develop new materials based on precise specifications, in order to solve specific applications for our customers.

✓✓✓ Excellent | ✓✓ Good | ✓ Low | ✗ Poor | ✗✗ Not recommended
*FDA and/or EC certificate may be requested for various references at the time of order; please contact us.
** Food contact certification: (EC) 1935/2004 - (FDA) 21 CFR 177.2600
*** Food contact certification: (EC) 10/2011 - (FDA) 21 CFR

Related products:



Adaptor - Female 1/8G - Female M5
Product reference: F18F5



Adaptor - Male 1/8G - Female M5
Product reference: M18F5



Screw M5 - Head Ø 8 mm - L 9 mm
Product reference: M5M15

E-mail: info@novacom-grp.com
Z.A. de Sars et Rosières - 30, rue de l'épau - 59230 ROSULT - France
Phone. : +33 (0)3 27 30 53 53
VAT Number : FR57 381 120 484