Code : **96B 50-- 18D-2**
2.5 Bellows Suction Cup Series
96B Ø 50MM

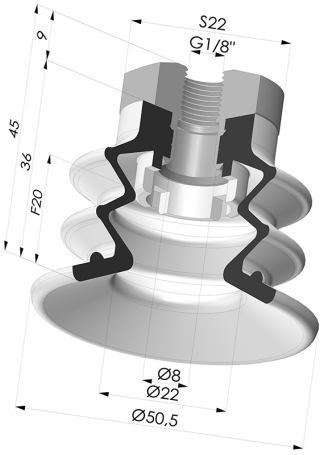

TECHNICAL INFORMATION

Range :	Suction cup
Category :	With bellows
Series :	96B
Height (in mm) :	45
Shape :	2.5 Bellows
Contact lip diameter :	50 mm
inner barrel diameter :	Female G1/8"
Number of bellows :	2.5 Bellows
Horizontal force :	78.5 N
Vertical force :	39 N
Arrow :	20 mm

Variants:



Variant reference:
96B 50PU 18D-2
- Color: Green
- Matter: Polyurethane
- Shore Hardness: SH60

E-mail: info@novacom-grp.com
Z.A. de Sars et Rosières - 30, rue de l'épau - 59230 ROSULT - France
Phone. : +33 (0)3 27 30 53 53
VAT Number : FR57 381 120 484