Code : **96B 25PU FM5**
2.5 Bellows Suction Cup Series
96B Ø 25MM

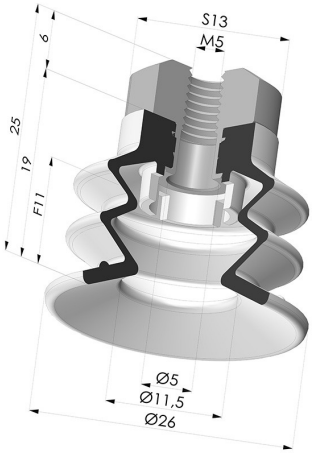


## TECHNICAL INFORMATION

| | |
|---|---|
| **Range :** | Suction cup |
| **Category :** | With bellows |
| **Series :** | 96B |
| **Height (in mm) :** | 25 |
| **Shape :** | 2.5 Bellows |
| **Contact lip diameter :** | 25 mm |
| **inner barrel diameter :** | M5 |
| **Number of bellows :** | 2.5 Bellows |
| **Horizontal force :** | 22 N |
| **Vertical force :** | 11 N |
| **Arrow :** | 11 mm |

## Variants:



Variant reference:
**96B 25PU FM5**
- Color: Green
- Matter: Polyurethane
- Shore Hardness: SH60

E-mail: info@novacom-grp.com
Z.A. de Sars et Rosières - 30, rue de l'épau - 59230 ROSULT - France
Phone. : +33 (0)3 27 30 53 53
VAT Number : FR57 381 120 484