Code : **4OF 80-- M38**
Oblong Suction Cup Series 4OF
85x23mm M38

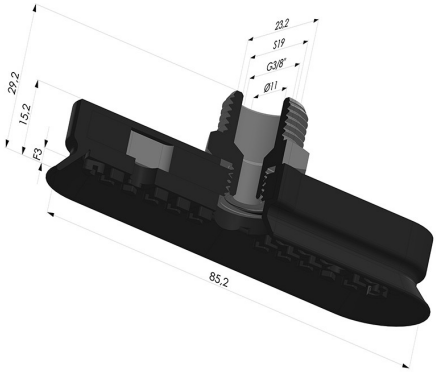

TECHNICAL INFORMATION

Range :	Suction cup
Category :	Oblong
Series :	4OF
Height (in mm) :	29
Shape :	Oblong
Length :	85mm
Width :	23mm
inner barrel diameter :	Male G3/8"
Number of bellows :	0.5 Bellows
Horizontal force :	76N
Vertical force :	38N
Arrow :	3mm

Variants:

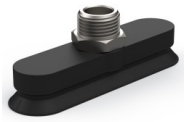

Variant reference:
4OF 80NI M38
- Matter: Nitrile
- Shore Hardness: SH70

E-mail: info@novacom-grp.com
Z.A. de Sars et Rosières - 30, rue de l'épau - 59230 ROSULT - France
Phone. : +33 (0)3 27 30 53 53
VAT Number : FR57 381 120 484