Code : **4OF 90-- F38**
4OF Series Oblong Suction Cup
94x32mm F38

TECHNICAL INFORMATION

Range :	Suction cup
Category :	Oblong
Series :	4OF
Height (in mm) :	30
Shape :	Oblong
Length :	94mm
Width :	32mm
inner barrel diameter :	Female G3/8"
Number of bellows :	0.5 Bellows
Horizontal force :	107N
Vertical force :	54N
Arrow :	4mm

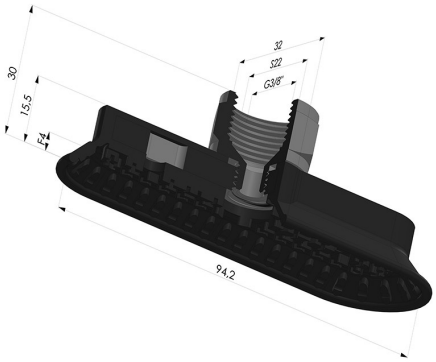

Variants:

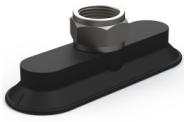

Variant reference:
4OF 90NI F38
- Matter: Nitrile
- Shore Hardness: SH70

E-mail: info@novacom-grp.com
Z.A. de Sars et Rosières - 30, rue de l'épau - 59230 ROSULT - France
Phone. : +33 (0)3 27 30 53 53
VAT Number : FR57 381 120 484