Code : **4OF 90-- M18**
Oblong Suction Cup Series 4OF
94x32mm M18

TECHNICAL INFORMATION

Range :	Suction cup
Category :	Oblong
Series :	4OF
Height (in mm) :	25
Shape :	Oblong
Length :	94mm
Width :	32mm
inner barrel diameter :	Male G1/8"
Number of bellows :	0.5 Bellows
Horizontal force :	107N
Vertical force :	54N
Arrow :	4mm

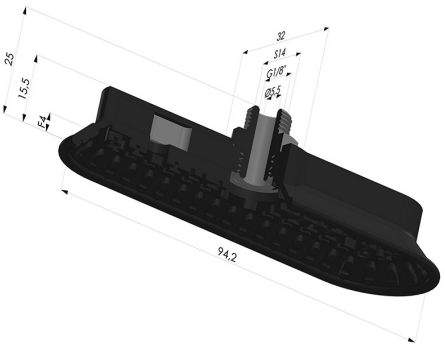

Variants:



Variant reference:
4OF 90NI M18
- Matter: Nitrile
- Shore Hardness: SH70

E-mail: info@novacom-grp.com
Z.A. de Sars et Rosières - 30, rue de l'épau - 59230 ROSULT - France
Phone. : +33 (0)3 27 30 53 53
VAT Number : FR57 381 120 484