Code : **4OF 110-- M14**
Oblong Suction Cup Series 4OF
115x43mm M14

TECHNICAL INFORMATION

Range :	Suction cup
Category :	Oblong
Series :	4OF
Height (in mm) :	33
Shape :	Oblong
Length :	115mm
Width :	43mm
inner barrel diameter :	Male G1/4"
Number of bellows :	0.5 Bellows
Horizontal force :	168N
Vertical force :	84N
Arrow :	4mm

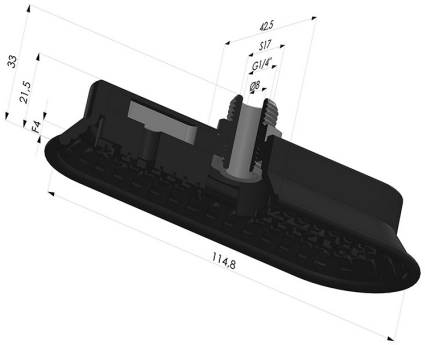

Variants:



Variant reference:
4OF 110NI M14
- Color: Black
- Matter: Nitrile
- Shore Hardness: SH50

Material guide:

	Material	Code	Temperature resistance (°C)	Flexibility	Abrasion resistance	UV/Weather resistance	Oil resistance	Food compatibility	Migration test
	Nitrile Black (Shore SH50)	NI	-10/+80	✓	✓	✗	✓✓	✗	✗

Requests for FDA and/or EC certificates must be made AT THE TIME OF ORDER. Any later request will incur additional charges. To meet the expectations of our industrial customers, NOVACOM offers the widest range of elastomer and thermoplastic materials. We can also develop new materials based on precise specifications, in order to solve specific applications for our customers.

✓✓✓ Excellent | ✓✓ Good | ✓ Low | ✗ Poor | ✗✗ Not recommended
*FDA and/or EC certificate may be requested for various references at the time of order; please contact us.
** Food contact certification: (EC) 1935/2004 - (FDA) 21 CFR 177.2600
*** Food contact certification: (EC) 10/2011 - (FDA) 21 CFR

E-mail: info@novacom-grp.com
Z.A. de Sars et Rosières - 30, rue de l'épau - 59230 ROSULT - France
Phone. : +33 (0)3 27 30 53 53
VAT Number : FR57 381 120 484