Code : **4 42-- A**
Oblong Suction Cup Series 4
41.5x17.5MM

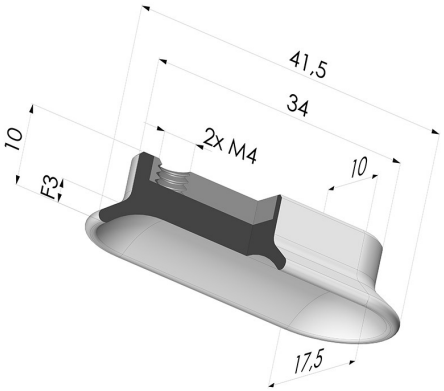


## TECHNICAL INFORMATION

| | |
|---|---|
| **Range :** | Suction cup |
| **Category :** | Oblong |
| **Series :** | 4 |
| **Height (in mm) :** | 10 |
| **Shape :** | Oblong |
| **Contact lip diameter :** | 41.5 x 17.5 mm |
| **Length :** | 41.5 mm |
| **Width :** | 17.5 mm |
| **inner barrel diameter :** | 2x4M |
| **Number of bellows :** | 0.5 Bellows |
| **Horizontal force :** | 13.25 N |
| **Vertical force :** | 1.76 N |
| **Arrow :** | 26.5 mm |

## Variants:



- Color: Translucent
- CE food certified
- Matter: Silicone
- Shore Hardness: SH60

## Material guide:

| | Material | Code | Temperature resistance (°C) | Flexibility | Abrasion resistance | UV/Weather resistance | Oil resistance | Food compatibility | Migration test |
|---|---|---|---|---|---|---|---|---|---|
|  | Silicone Translucent (Shore SH60) | SL T | -60/+250 | ✓✓✓ | ✓ | ✓✓✓ | ✓ | FDA ** | ✗ |

Requests for FDA and/or EC certificates must be made AT THE TIME OF ORDER. Any later request will incur additional charges. To meet the expectations of our industrial customers, NOVACOM offers the widest range of elastomer and thermoplastic materials. We can also develop new materials based on precise specifications, in order to solve specific applications for our customers.

✓✓✓ Excellent | ✓✓ Good | ✓ Low | ✗ Poor | ✗✗ Not recommended
*FDA and/or EC certificate may be requested for various references at the time of order; please contact us.
** Food contact certification: (EC) 1935/2004 - (FDA) 21 CFR 177.2600
*** Food contact certification: (EC) 10/2011 - (FDA) 21 CFR

E-mail: info@novacom-grp.com
Z.A. de Sars et Rosières - 30, rue de l'épau - 59230 ROSULT - France
Phone. : +33 (0)3 27 30 53 53
VAT Number : FR57 381 120 484