Code : **4 14-- A**
Oblong Suction Cup Series 4, 14x6.8 mm

TECHNICAL INFORMATION

Range :	Suction cup
Category :	Oblong
Series :	4
Height (in mm) :	10
Shape :	Oblong
Contact lip diameter :	14.5x6.5 mm
Length :	14.5 mm
Width :	6.5 mm
inner barrel diameter :	2 mm
Number of bellows :	none
Horizontal force :	3.5 N
Vertical force :	1.5 N
Volume :	0.20 cm³
Mass :	0.50 g
Arrow :	3.5 mm

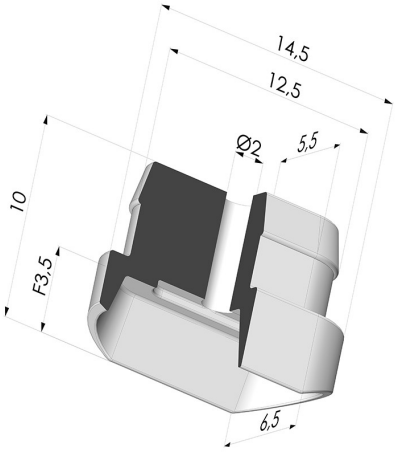

Variants:



Variant reference:
4 14NI A
- Color: Black
- Matter: Nitrile
- Shore Hardness: SH60



Variant reference:
4 14SL A SH40
- Color: Red food-grade CE certification
- Matter: Silicone
- Shore Hardness: SH40

Material guide:

	Material	Code	Temperature resistance (°C)	Flexibility	Abrasion resistance	UV/Weather resistance	Oil resistance	Food compatibility	Migration test
	Silicone Red food-grade CE certification (Shore SH40)	SL	-60/+250	✓✓✓	✗	✓✓✓	✗	FDA **	A, B, D2

Requests for FDA and/or EC certificates must be made AT THE TIME OF ORDER. Any later request will incur additional charges. To meet the expectations of our industrial customers, NOVACOM offers the widest range of elastomer and thermoplastic materials. We can also develop new materials based on precise specifications, in order to solve specific applications for our customers.

✓✓✓ Excellent | ✓✓ Good | ✓ Low | ✗ Poor | ✗✗ Not recommended
*FDA and/or EC certificate may be requested for various references at the time of order; please contact us.
** Food contact certification: (EC) 1935/2004 - (FDA) 21 CFR 177.2600
*** Food contact certification: (EC) 10/2011 - (FDA) 21 CFR

E-mail: info@novacom-grp.com
Z.A. de Sars et Rosières - 30, rue de l'épau - 59230 ROSULT - France
Phone. : +33 (0)3 27 30 53 53
VAT Number : FR57 381 120 484