Code : **5 35-- A**
Flat Suction Cup Series 5, Ø 35 mm

TECHNICAL INFORMATION

Range :	Suction cup
Category :	Plates
Series :	5
Height (in mm) :	8
Shape :	Plate
Contact lip diameter :	35 mm
inner barrel diameter :	6 mm
Number of bellows :	0.5 Bellows
Horizontal force :	43.72 N
Vertical force :	21.86 N
Arrow :	5mm

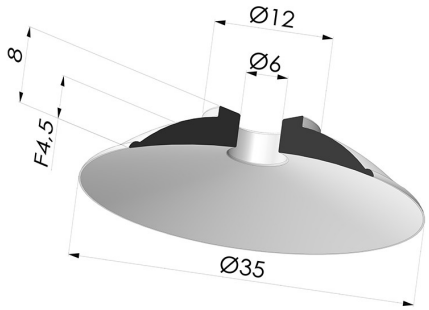

Variants:



Variant reference:
5 35CN A
- Color: Brown FDA food certified
- Matter: Natural rubber
- Shore Hardness: SH40



Variant reference:
5 35SLT A
- Color: Translucent
- CE food certified
- Matter: Silicone
- Shore Hardness: SH60

Variant reference:
5 35SLB A
- Color: White
- FDA and CE food-grade certified
- Matter: Silicone
- Shore Hardness: SH40



Variant reference:
5 35NI A
- Color: Black
- Matter: Nitrile
- Shore Hardness: SH50

Material guide:

	Material	Code	Temperature resistance (°C)	Flexibility	Abrasion resistance	UV/Weather resistance	Oil resistance	Food compatibility	Migration test
	Natural rubber Brown FDA food certified (Shore SH40)	CN	-20/+70	✓✓✓	✓✓	✗✗	✗✗	FDA **	✗
	Silicone Translucent (Shore SH60)	SL T	-60/+250	✓✓✓	✓	✓✓✓	✓	FDA **	✗
	Silicone White (Shore SH40)	SL B	-60/+250	✓✓✓	✗	✓✓✓	✗	FDA **	✗
	Nitrile Black (Shore SH50)	NI	-10/+80	✓	✓	✗	✓✓	✗	✗

Requests for FDA and/or EC certificates must be made AT THE TIME OF ORDER. Any later request will incur additional charges. To meet the expectations of our industrial customers, NOVACOM offers the widest range of elastomer and thermoplastic materials. We can also develop new materials based on precise specifications, in order to solve specific applications for our customers.

✓✓✓ Excellent | ✓✓ Good | ✓ Low | ✗ Poor | ✗✗ Not recommended

*FDA and/or EC certificate may be requested for various references at the time of order; please contact us.
** Food contact certification: (EC) 1935/2004 - (FDA) 21 CFR 177.2600
*** Food contact certification: (EC) 10/2011 - (FDA) 21 CFR

Related products:



Adaptor - Female G1/4" - Female M6

Product reference:
F14F6



Adaptor - Female 1/8G - Female M6

Product reference:
F18F6



Adaptor - Male 1/4G - Female M6

Product reference:
M14F6



Adaptor - Male 1/8G - Female M6

Product reference:
M18F6



Screw M6 - Head Ø 12 mm - L 15 mm

Product reference:
M6T12L15

E-mail: info@novacom-grp.com
Z.A. de Sars et Rosières - 30, rue de l'épau - 59230 ROSULT - France
Phone. : +33 (0)3 27 30 53 53
VAT Number : FR57 381 120 484