Code : **91 31-- 38D-2-F**
Bellows Suction Cup 1.5 folds
Series 91, Ø 35 mm

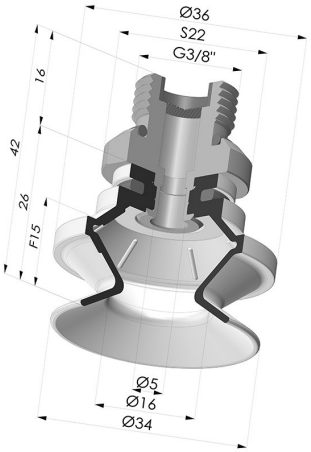

TECHNICAL INFORMATION

Range :	Suction cup
Category :	With bellows
Series :	91
Height (in mm) :	42
Shape :	1.5 Bellows
Contact lip diameter :	34 mm
inner barrel diameter :	Male G3/8"
Number of bellows :	1.5 Bellows
Horizontal force :	38 N
Vertical force :	19 N
Arrow :	15 mm

Variants:



Variant reference:
91 31NI 38D-2-F
- Color: Black
- Matter: Nitrile



Variant reference:
91 31SL 38D-2-F
- Color: Red food-grade CE certification
- Matter: Silicone
- Shore Hardness: SH60



Variant reference:
91 31SLT 38D-2-F
- Color: Translucent
- CE food certified
- Matter: Silicone
- Shore Hardness: SH60

Material guide:

	Material	Code	Temperature resistance (°C)	Flexibility	Abrasion resistance	UV/Weather resistance	Oil resistance	Food compatibility	Migration test
	Silicone Red food-grade CE certification (Shore SH60)	SL	-60/+250	✓✓✓	✗	✓✓✓	✗	FDA **	A, B, D2
	Silicone Translucent (Shore SH60)	SL T	-60/+250	✓✓✓	✓	✓✓✓	✓	FDA **	✗

Requests for FDA and/or EC certificates must be made AT THE TIME OF ORDER. Any later request will incur additional charges. To meet the expectations of our industrial customers, NOVACOM offers the widest range of elastomer and thermoplastic materials. We can also develop new materials based on precise specifications, in order to solve specific applications for our customers.

✓✓✓ Excellent | ✓✓ Good | ✓ Low | ✗ Poor | ✗✗ Not recommended
*FDA and/or EC certificate may be requested for various references at the time of order; please contact us.
** Food contact certification: (EC) 1935/2004 - (FDA) 21 CFR 177.2600
*** Food contact certification: (EC) 10/2011 - (FDA) 21 CFR

Related products:

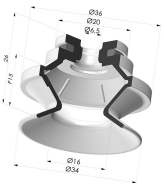

Bellows Suction Cup 1.5 folds Series 91, Ø 35 mm
Product reference: 91 31-- A



Separable Male Fitting 3/8G - with Filter
Product reference: 9M38-2-F

E-mail: info@novacom-grp.com
Z.A. de Sars et Rosières - 30, rue de l'épau - 59230 ROSULT - France
Phone. : +33 (0)3 27 30 53 53
VAT Number : FR57 381 120 484